MV5500/15

Three phase-4poles-1500RPM-50HZ
230/400 Voltage

Mechanical Features		
General		
Working moment	**437.39**	kg.cm
Unblance	**218.7**	kg.cm
Force	**5495**	kg
Bearing		
TYPE	**NJ2315**	
Life(h)	100%	**26126**
	80%	**54970**
	50%	**>100000**
Bearing Grease		
Lube Schedule	60g	
Lube replacement	120g	
Grease Type	SKF LGHP 2	

Electric Features		
General		
Nominal voltage	**Δ:230V**	**Y:400V**
Input power	**3.6KW**	
Current A max	**6.5A**	
Power factor	**0.75**	
La/in	7.1	
Certification		
ETL CLASS II DIV.II	**T4**	
GROUP F G TENV NEMA 4		
IP65		
Amb Temp.	**(-20°~+40°)**	

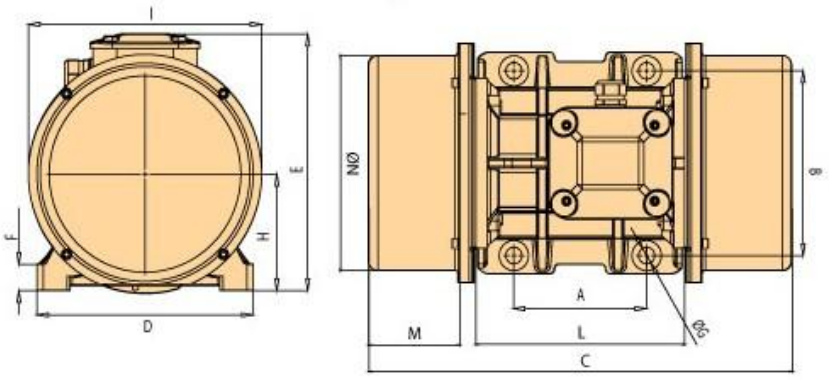

A	180
B	280
C	605
M	143
G	26
Holes	4
D	336
E	353
F	35
H	167
I	345
L	321
N	310

Clamping torque(Nm)	696

n.weight	Screw	washer	Cable type	Cable Glande
193	M24	25X44	4GX6	M32X1.5

