MV1100/1

Three phase-6poles-1000RPM-50HZ
230/400 Voltage

Mechanical Features			Electric Features		
General			**General**		
Working moment	**187.69**	kg.cm	Nominal voltage	**Δ:230V**	**Y:400V**
Unblance	**93.84**	kg.cm	Input power	**0.75KW**	
Force	**1121**	kg	Current A max	**Y:1.42A**	
Bearing			Power factor	**0.59**	
TYPE(FAG/SKF)	**NJ2308**		La/in	3.2	
	100%	**>100000**	**Certification**		
Life(h)	80%	**>100000**	ETL CLASS II DIV.II	**T4**	
	50%	**>100000**	GROUP F G TENV NEMA 4		
Bearing Grease					
Lube Schedule	15g		IP65		
Lube replacement	30g		Amb Temp. **(-20°~+40°)**		
Grease Type	SKF LGHP 2				

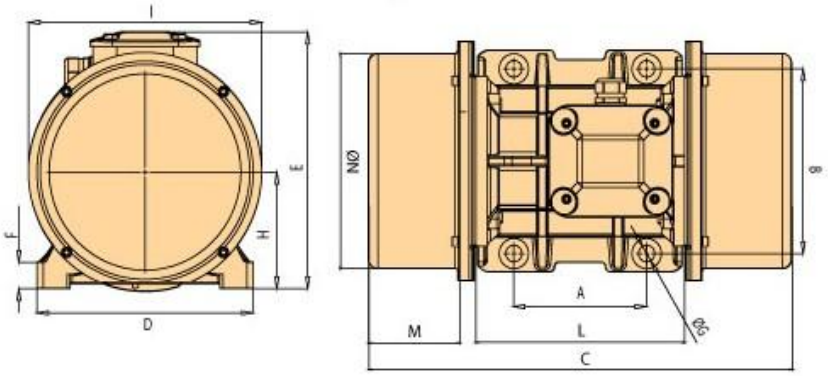

A	140
B	190
C	510
M	129
G	17
Holes	4
D	230
E	262
F	30
H	120
I	247
L	220
N	222

Clamping torque(Nm)	185

n.weight	Screw	washer	Cable type	Cable Glande
80	M16	17X30	4GX4	M25X1.5