MV13000/1

Three phase-6poles-1000RPM-50HZ
400 Voltage

Mechanical Features			Electric Features	
General			**General**	
Working moment	**2329.84**	kg.cm	Nominal voltage	**Δ:400V**
Unblance	**1164.92**	kg.cm	Input power	**10KW**
Force	**13009**	kg	Current A max	**17A**
Bearing			Power factor	**0.72**
TYPE	**NJ2320**		La/in	6.2
	100%	**15387**	**Certification**	
Life(h)	80%	**32382**	ETL CLASS II DIV.II	**T4**
	50%	**>100000**	GROUP F G TENV NEMA 4	
Bearing Grease				
Lube Schedule		115g	IP65	
Lube replacement		230g	Amb Temp. **(-20°~+40°)**	
Grease Type		SKF LGHP 2		

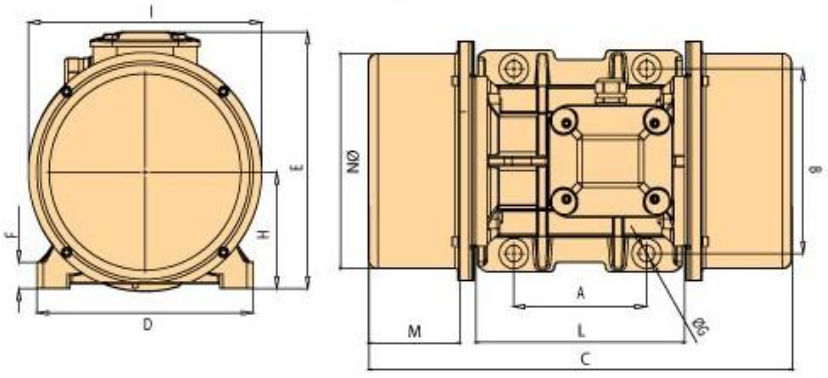

A	125
B	380
C	965.5
M	280
G	39
Holes	6
D	446
E	415
F	42
H	206
I	400
L	405
N	378

Clamping torque(Nm)	1864

n.weight	Screw	washer	Cable type	Cable Glande
422	M36	37X66	4GX6	M32X1.5