MV1500/1

Three phase-6poles-1000RPM-50HZ
230/400 Voltage

Mechanical Features			Electric Features		
General			**General**		
Working moment	**284.76**	kg.cm	Nominal voltage	**Δ:230V**	**Y:400V**
Unblance	**142.38**	kg.cm	Input power	**1.0KW**	
Force	**1520**	kg	Current A max	**Y:2A**	
Bearing			Power factor	**0.72**	
TYPE	**NJ2308**		La/in	3.5	
	100%	**70146**	**Certification**		
Life(h)	80%	**>100000**	ETL CLASS II DIV.II	**T4**	
	50%	**>100000**	GROUP F G TENV NEMA 4		
Bearing Grease					
Lube Schedule	15g		IP65		
Lube replacement	30g		Amb Temp. **(-20°~+40°)**		
Grease Type	SKF LGHP 2				

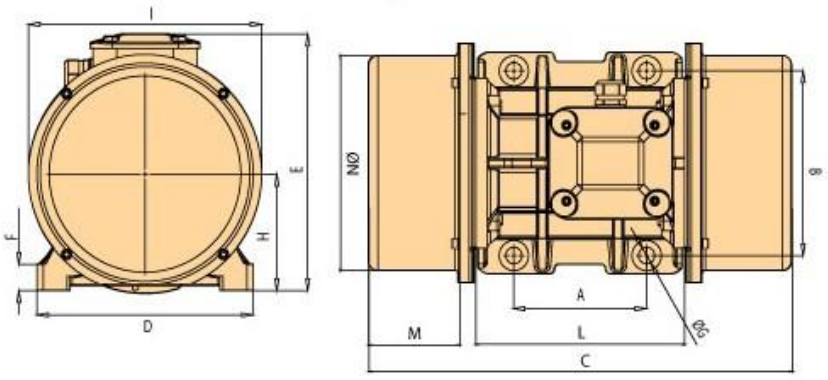

A	140
B	190
C	564.5
M	170
G	17
Holes	4
D	230
E	262
F	30
H	122
I	237
L	224.5
N	222

Clamping torque(Nm)	185

n.weight	Screw	washer	Cable type	Cable Glande
84	M20	21X37	4GX4	M25X1.5