MV300/1

Three phase-6poles-1000RPM-50HZ
230/400 Voltage

Mechanical Features			Electric Features		
General			**General**		
Working moment	**56.93**	kg.cm	Nominal voltage	**Δ:230V**	**Y:400V**
Unblance	**28.46**	kg.cm	Input power	**0.35KW**	
Force	**318**	kg	Current A max	**Δ:1.17A**	**Y:0.67A**
Bearing			Power factor	**0.68**	
TYPE	**6306**		La/in	2.5	
	100%	**44065**	**Certification**		
Life(h)	80%	**>100000**	ETL CLASS II DIV.II	**T4**	
	50%	**>100000**	GROUP F G TENV NEMA 4		
Bearing Grease					
Lube Schedule			IP65		
Lube replacement			Amb Temp. **(-20°~+40°)**		
Grease Type					

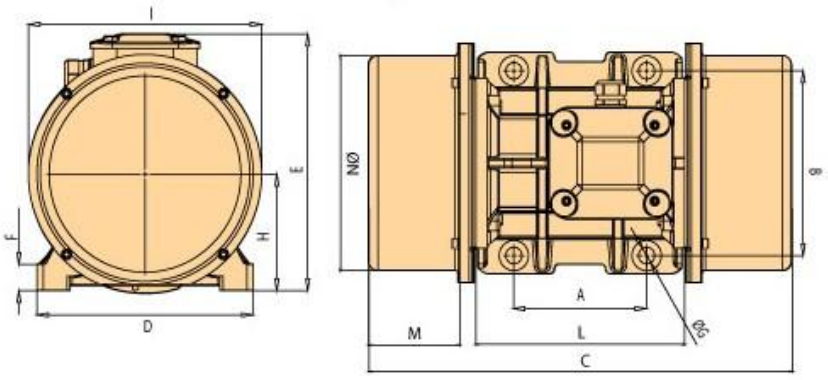

A	120
B	170
C	391
M	93
G	17
Holes	4
D	208
E	210
F	22
H	94
I	180
L	205
N	170

Clamping torque(Nm)	185

n.weight	Screw	washer	Cable type	Cable Glande
29.1	M16	17X30	4GX2.5	M20X1.5