MV6500/1

Three phase-6poles-1000RPM-50HZ
220/400 Voltage

Mechanical Features			Electric Features		
General			**General**		
Working moment	**1165.19**	kg.cm	Nominal voltage	**Δ:220V**	**Y:400V**
Unblance	**582.6**	kg.cm	Input power	**4.3KW**	
Force	**6506**	kg	Current A max	**7.76A**	
Bearing			Power factor	**0.69**	
TYPE	**NJ2316**		La/in	6.2	
	100%	**26829**	**Certification**		
Life(h)	80%	**56578**	ETL CLASS II DIV.II	**T4**	
	50%	**>100000**	GROUP F G TENV NEMA 4		
Bearing Grease					
Lube Schedule	60g		IP65		
Lube replacement	120g		Amb Temp. **(-20°~+40°)**		
Grease Type	SKF LGHP 2				

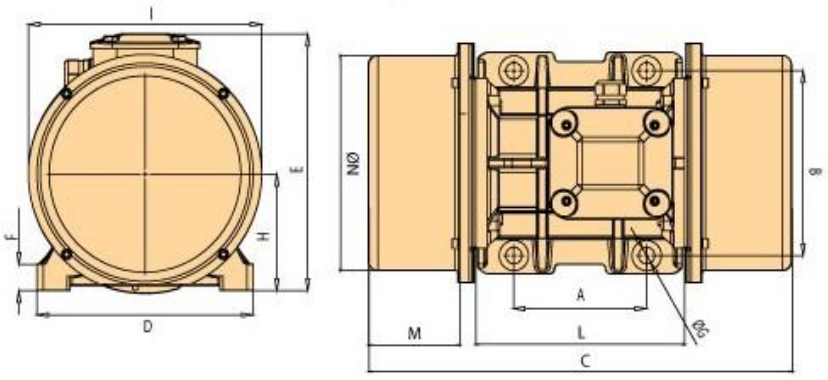

A	200
B	320
C	709.5
M	170
G	28
Holes	4
D	388
E	402
F	42
H	206
I	400
L	369
N	378

Clamping torque(Nm)	873

n.weight	Screw	washer	Cable type	Cable Glande
305	M27	28X50	4GX6	M32X1.5