MV9000/1

Three phase-6poles-1000RPM-50HZ
400 Voltage

Mechanical Features			Electric Features	
General			**General**	
Working moment	**1600.39**	kg.cm	Nominal voltage	**Δ:400V**
Unblance	**800.2**	kg.cm	Input power	**7.5KW**
Force	**9174**	kg	Current A max	**13.2A**
Bearing			Power factor	**0.73**
TYPE	**NJ2316**		La/in	6.3
	100%	**12431**	**Certification**	
Life(h)	80%	**25947**	ETL CLASS II DIV.II	**T4**
	50%	**87589**	GROUP F G TENV NEMA 4	
Bearing Grease				
Lube Schedule	65g		IP65	
Lube replacement	130g		Amb Temp. **(-20°~+40°)**	
Grease Type	SKF LGHP 2			

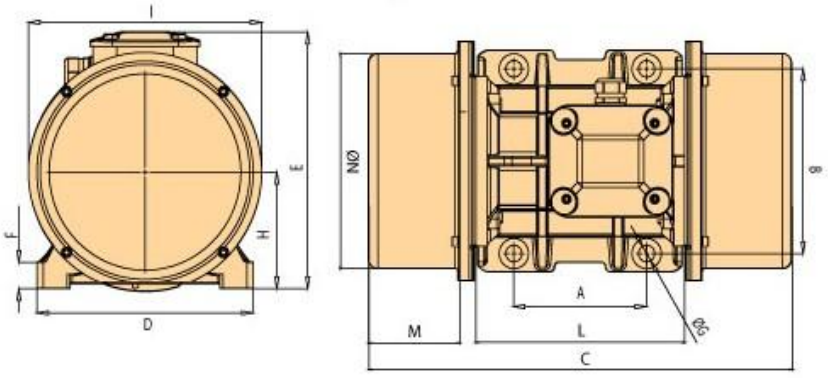

A	200
B	320
C	779.5
M	205
G	28
Holes	4
D	388
E	402
F	42
H	206
I	400
L	369
N	378

Clamping torque(Nm)	873

n.weight	Screw	washer	Cable type	Cable Glande
338	M27	28X50	4GX6	M32X1.5